No.	Content	DATE
0	New draw.	4/29/2026

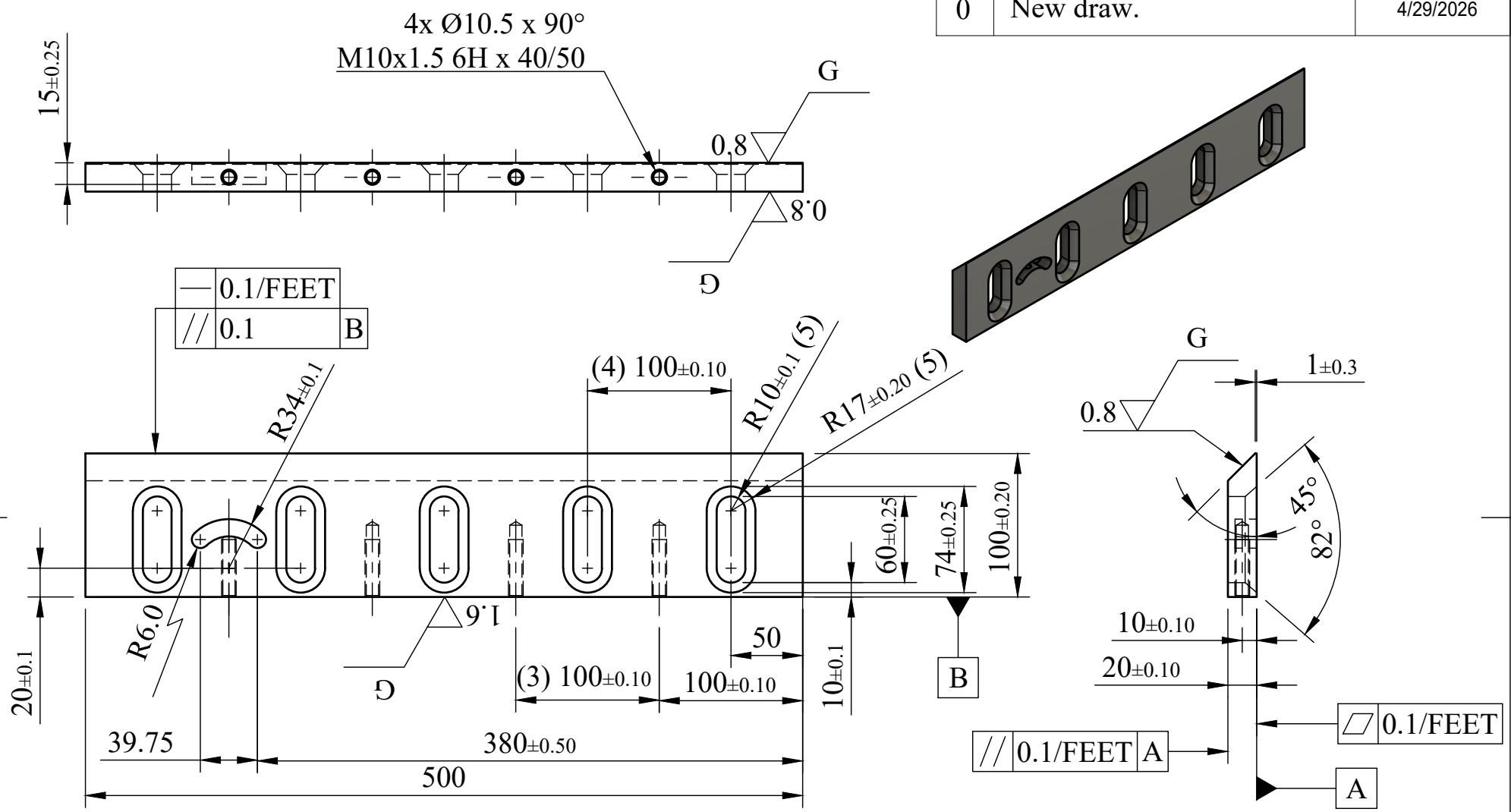

NOTE:
Remove chips on part.
Unless chamfer & drill hole C0.2x45 max.

UNLESS OTHERWISE SPECIFIED:
DIMENSIONS ARE IN MILLIMETERS
SURFACE FINISH:
TOLERANCES: 0: +/-0.5
0.0: +/-0.25
0.000 : +/-0.05
0.0000: +/-0.002
Angular : +/-0.5rad

Draw by:	Phi Trần Nhật	4/27/2026	Part: kn50010020	Rev NR
Check :	Phi Trần Nhật	4/27/2026	Assy : Default Project	Scale: 1:6
PLOS TECHNICAL VIET NAM SOUTH			Mat. : Steel	
			HRC: 56~60 Weight: 5929.339 g	A4

Mr Phi :+84-358436477